In Proc. 4th IEEE International Smart Cities Conference (ISC2 2018), September 16-19, 2018, Kansas City, Missouri, USA

A Power Disaggregation Approach to Identify Power-Temperature Models of HVAC Units

Xiangyu Zhang, Mengmeng Cai, Manisa Pipattanasomporn, Saifur Rahman
The Bradley Department of Electrical and Computer Engineering
Virginia Tech – Advanced Research Institute
Arlington, VA 22203 USA

***Abstract*—With the increasing deployment of smart meters and Internet-of-Things technologies, buildings are becoming smarter, and capable of participating in demand response (DR) programs. Heating, Ventilation and Air Conditioning (HVAC) units, as one of the major loads in buildings and due to their cyclic operating characteristics, are excellent candidates for peak load management. A prerequisite to HVAC control for peak load management is to know their power consumption. While many studies assume that HVAC consumes fixed rated power during its operation, in reality this value is not fixed but varies with outdoor temperature. Performing DR based on this assumption may result in unexpected load reduction, i.e., the reduction may be lower or higher than expected. Though power consumption measurement of individual HVAC units can provide necessary data, it is prohibitively expensive to install a power meter for each HVAC unit. To reduce hardware investments, this paper proposes an algorithm to derive power-temperature models of individual HVAC units from a single power meter that measures the power consumption of all HVAC units. Research findings indicate that the power consumption of individual HVAC units can be precisely modeled and disaggregated from the single power meter data.**

Keywords—power disaggregation, HVAC, demand response, smart building, Internet of Things

I. Introduction

The rapid development of information technology, hardware research and the electricity market have stimulated a growing number of smart end users in the power system, such as smart homes and smart buildings[1], [2]. Especially with the advent of the Internet of Things (IoT) technology, many research projects, open source software and commercial products that help home and commercial buildings to improve energy efficiency are becoming increasingly popular [3]–[5]. As an indispensable part of the smart grid paradigm, the demand side intelligence has started to bring tremendous benefits towards both the utility and customers. In addition, due to the drop in technology prices, many building owners can now afford to install a building energy management (BEM) system. BEM gives building owners the awareness of building energy consumption and the ability to monitor and control devices in buildings. More importantly, it introduces a convenient and intelligent approach for energy savings.

Many efforts have been made in recent years on energy efficiency improvement and energy savings in commercial buildings. Among them, two aspects of smart building control are of great interest to building owners, namely peak load management [6]–[8] and DR [9]–[11]. While peak load management puts the emphasis on avoiding high peak demand charges, DR usually requires to reduce the load even more when the grid is under stress. According to [12], HVAC is accounted for more than 30% of energy usage in small- and medium-sized commercial buildings. As HVAC operation is directly related to occupant thermal comfort, it cannot be turned off arbitrarily during DR. As a result, previous studies [13], [14] take advantage of the cyclic HVAC power consumption behavior, and propose a coordinated control strategy to limit the total consumption of multiple HVAC units. However, the power consumption of HVAC units are considered fixed in these studies. In reality, HVAC power varies under different outdoor temperature conditions. This implies an error in DR control can exist when the fixed power model is used. If a building has multiple HVAC units, this error can accumulate, which might fail the power reduction to a predefined level.

To address this knowledge gap, one straightforward approach is to monitor the power consumption of each HVAC unit with a corresponding power meter and study the relationship between HVAC power consumption and the outdoor temperature. Nonetheless, considering that each power meter usually cost several hundreds of dollars, this approach becomes prohibitively expensive. As a result, this paper investigates a cost-efficient alternative to identify power consumption of individual HVAC units using only a single power meter. The proposed power disaggregation algorithm uses the total HVAC power consumption to derive the power-temperature models for each HVAC unit. With these models, the overall power consumption of all HVAC units under DR control can be estimated more accurately. The algorithm is validated using data collected from a building in Blacksburg, VA, U.S.A. The scope of this paper focuses on single-stage packaged HVAC units.

II. Methodology

In a traditional power disaggregation problem, the goal is to distinguish the power consumption of individual loads by analyzing the aggregated power consumption at the building level. Similarly, in this study, an algorithm is proposed to identify the power consumption of individual HVAC units based on readings from a single power meter, and further study their relationship with outdoor temperature. That is, functions are generated that describe the relationship between outdoor

temperature and power consumption of individual HVAC units

A. Power Consumption Model of a Single HVAC Unit

To begin with, the power consumption model of a single HVAC unit is studied. For this purpose, a power meter is installed to measure the power consumption of one HVAC unit. An example of the HVAC power consumption during a 24-hour period, together with the corresponding HVAC ON/OFF status and outdoor temperatures, is shown in Fig. 1.

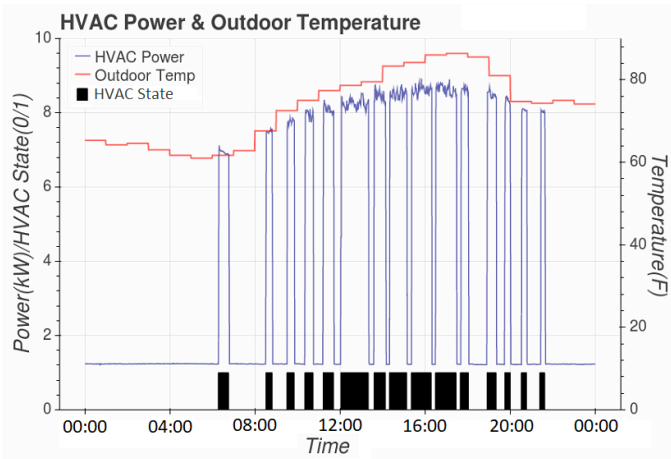

Fig. 1. Power consumption of a HVAC unit during a 24-hour period.

From Fig. 1, it is clear that the power consumption of an HVAC unit varies according to the outdoor temperature. That is, HVAC power consumption is higher at higher outdoor temperature, and is lower at lower outdoor temperature. The power consumption of one HVAC unit is plotted against outdoor temperature in Fig. 2 using the historical data during a three-month summer period. The data is recorded in one-minute intervals.

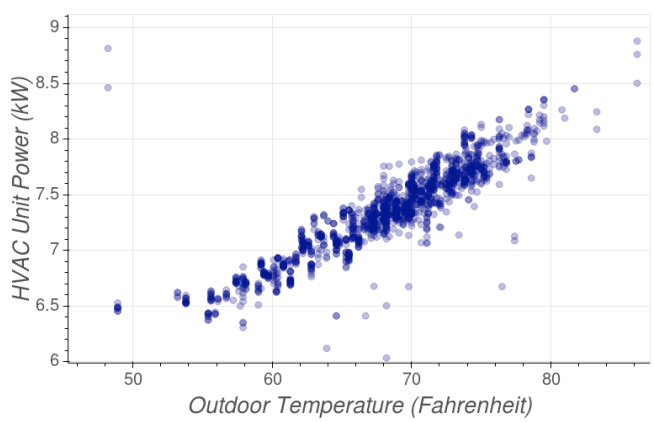

Fig. 2. HVAC power vs. outdoor temperature.

According to Fig. 2, power consumption of the HVAC unit appears to have a good linear relationship with outdoor temperature. Hence, this linear relationship can be expressed as shown in (1).

from a single meter data.

$$P = S(\omega \cdot Temp_{out} + b) + S_f \cdot f \tag{1}$$

Where, P is the power consumption of an HVAC unit; $Temp_{out}$ is the outdoor temperature; $S \in \{0,1\}$ is the status of the HVAC cooling unit; and $S_f \in \{0,1\}$ is the status of the HVAC fan. These variables are recorded from the building under study. The rest of the variables, ω, b and f are determinants of the power-temperature model; while the physical meaning of f is the power consumption of an HVAC unit's fan.

In Fig. 1, it can be seen that there are two components of HVAC power consumption: that of the compressor and the fan. That is, when the HVAC cooling unit is OFF, the fan is still on for ventilation purpose and constantly consumes around 1.4 kW. In practice, there are three possible conditional probabilities between the status of the cooling unit and the ventilation fan: $\Pr(S_f = 1 \mid S = 1) = 1$, $\Pr(S_f = 0 \mid S = 1) = 0$ and $\Pr(S = 0 \mid S_f = 0) = 1$. The relationship in (1) is also observed based on the data collected from other HVAC units, which makes this single HVAC power model general.

B. Power Disaggregation Algorithm

In this section, a power disaggregation algorithm is discussed that identifies the power-temperature model of individual HVAC units from the aggregated HVAC consumption measured by a single power meter. This algorithm makes it more applicable and affordable for building owners to conduct accurate HVAC control during a DR event.

When a single power meter is used to measure power consumption of multiple HVAC units, and each unit has its power consumption relationship as shown in **Error! Reference source not found.**, identification of parameters (ω, b and f) can lead to solving power consumption of individual HVAC units.

Assuming the power consumption model of HVAC i (P_i) is written as shown in (2):

$$P_i = S_i(\omega_i \cdot Temp_{out} + b_i) + S_{fi} \cdot f_i \tag{1}$$

The aggregated HVAC power consumption measured at time t (P^t) is equal to the sum of the power of all individual units (P_i) plus an offset (μ), as expressed in (3):

$$\begin{aligned} P^t &= \sum_{i=1}^{K} P_i^t + \mu \\ &= \sum_{i=1}^{K} \left[S_i^t(\omega_i \cdot Temp_{out}^t + b_i) + S_{fi}^t \cdot f_i \right] + \mu \\ &= \sum_{i=1}^{K} \left(S_i^t \cdot \omega_i \cdot Temp_{out}^t + S_i^t \cdot b_i + S_{fi}^t \cdot f_i \right) + 1 \cdot \mu \end{aligned} \tag{2}$$

Where, the status of each HVAC unit at time t is represented by S_i^t, and μ represents the constant power consumption offset of some always-on devices or just noise measured by the power meter. Assuming:

$$\mathrm{x}^t = [S_1^t \cdot Temp_{out}^t, S_1^t, S_{f1}^t, \quad S_K^t \cdot Temp_{out}^t, S_K^t, S_{fK}^t, 1]^T \tag{4}$$

Where, $\mathbf{X}$ is a matrix with dimension of $U \times (3K+1)$. $\mathbf{y}$ and $\mathbf{w}$ are vectors of dimension $U \times 1$ and $(3K+1) \times 1$ respectively. U is the total number of $(\mathbf{X}, \mathbf{y})$ data pairs.

Since the HVAC/fan status, the aggregated HVAC power consumption and outdoor temperature can be recorded from smart thermostats, a power meter and an environmental sensor, respectively, these variables $(S_i^t, S_{fi}^t, P^t, Temp_{out}^t)$ are known. Hence the identification of parameters (ω_i , b_i and f_i) is transformed into a multivariate linear regression problem (i.e., minimizing residual $\mathbf{y} - \mathbf{Xw}$).

The optimal parameter set can be calculated analytically, as shown in (8).

$$\mathbf{w} = (\mathbf{X}^T\mathbf{X})^{-1}\mathbf{X}^T\mathbf{y} \tag{8}$$

III. System Configuration and Validating Procedure

To validate the proposed algorithm above, experiments were conducted on five HVAC units in a commercial building in Blacksburg, Virginia, USA. In this section, the configuration of the experiment system is discussed, followed by the validation procedure.

A. System Configuration

The building under study already has an open source building energy management system (BEMOSS) [3], [15], [16] installed. BEMOSS serves as a platform for communicating with and archiving data from smart thermostats, smart meters and environmental sensors in the building. Five HVAC units are responsible for the climate control of five thermal zones inside the building. Each HVAC unit is controlled by a smart thermostat located in the corresponding thermal zone. Based on the measured data, the average power consumption of each HVAC unit when outdoor temperature is 70℉ is shown in Table I. BEMOSS communicates with the thermostats via RESTful API, and records the ON/OFF status and indoor/set-point temperatures of HVAC units. In order to provide the ground-truth HVAC power consumption, each HVAC unit has a corresponding power meter to measure its power consumption. Power meters used in the experiment are BACnet-based meters, which are accessible by BEMOSS via a BACnet gateway. The illustration of the power meter installation in the building is shown in Fig. 3(a).

TABLE I. POWER OF EACH HVAC UNIT AT TEMPERATURE 70℉

HVAC#	1	2	3	4	5
Power (kW)	7.5	6.3	6.3	12.4	3.7

$$\mathbf{X} = [\mathrm{x}^1, \mathrm{x}^2, \quad \mathrm{x}^U]^T \tag{5}$$

$$\mathbf{y} = [P^1, P^2, \quad P^U]^T \tag{6}$$

$$\mathbf{w} = [\omega_1, b_1, f_1, \quad , \omega_K, b_K, f_K, \mu]^T \tag{7}$$

While the installation as illustrated in Fig. 3(a) can provide the ground-truth power consumption of individual HVAC units, it is costly. Typically, in many real-world deployments a single power meter is used to measure aggregated HVAC power consumption. To simulate an installation which is much more common in real life, the readings of all individual power meters are added to become the readings from a virtual lumped power meter, as shown in Fig. 3 (b).

In this study, this aggregated HVAC readings are used as the input to the power disaggregation algorithm, the results of which (i.e., the disaggregated individual HVAC consumption) are then compared with readings from the corresponding power meter for algorithm validation.

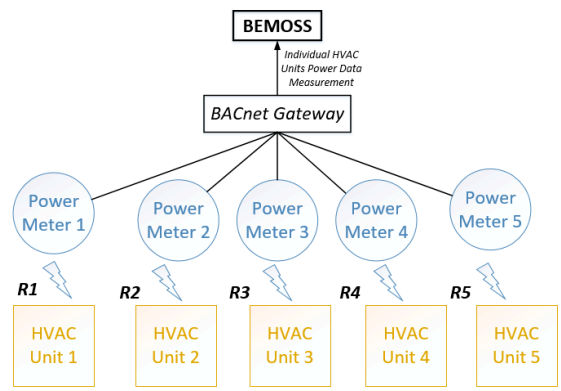

(a) Actual deployment (for this research)

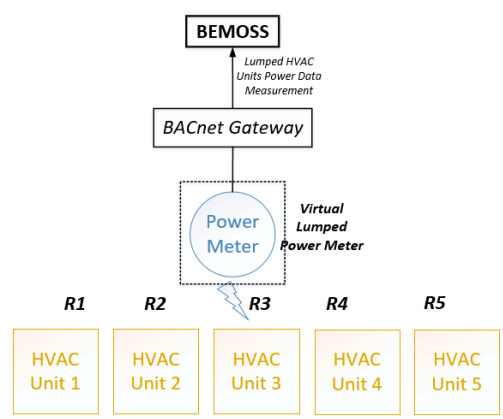

(b) Simulated deployment (in a typical real-world application)

Fig. 3. Configurations of power meter installation.

B. Validation Procedure

The validation procedure is explained as follows:

1) Data collection: historical data of all five thermostats and five power meters were downloaded from the BEMOSS platform.

2) Data fusion: the HVAC power consumption data, their ON/OFF status and weather data were combined according to the data timestamp. A column in the data frame was created as the sum of all power meters' readings, representing the aggregated HVAC power consumption data.

3) Data cleaning: Bad data occurs in several occasions. For instance, HVAC power readings can be much higher when the transient power is recorded during the start of an HVAC unit; in addition, it is possible to have data gaps when meters fail to record the data. In this study, the data were grouped by states and outliers of each state were detected and deleted.

4) Training/Testing data splitting: The clean dataset was first randomly shuffled and then split into two groups: training and testing datasets. The training dataset was used for power disaggregation and determination of individual HVAC power consumption; the testing dataset was used to examine the result of power disaggregation.

5) HVAC power disaggregation: power disaggregation was conducted using the algorithm proposed in Section II. Parameters of each HVAC unit (ω_i , b_i and f_i) were determined.

6) Model validation: Firstly, the disaggregated HVAC power-temperature models obtained from the proposed approach were compared with those learnt from individually measured HVAC power consumption data. Secondly, with these power-temperature models, the power consumed by all HVAC units under different statuses were calculated using (3) and were compared with the measured data in the testing dataset.

IV. Results and Discussion

Following the above procedure, the data in one-minute intervals were collected during the three-month summer period. Out of this, 25% was randomly chosen as the test dataset, while the remaining 75% became the training dataset. After disaggregating the power consumption of individual HVAC units through the proposed power disaggregation algorithm, the following validations were conducted:

- Validation on individual HVAC power-temperature models
- Validation on the total HVAC power consumption using disaggregated models

In addition, the amount of data needed to accurately disaggregate the power model is also studied.

A. Individual HVAC power-temperature models

By solving (8), the parameters ω , b and f characterizing the power-temperature model of individual HVAC units in all five zones of the building were determined as shown in Table II. In addition, the offset power μ was determined as 1.1176 kW, representing the constant power measured when none of the HVAC units and their fans is ON.

TABLE II. PARAMETERS CHARACTERIZING INDIVIDUAL HVAC POWER CONSUMPTION

	$\omega\,(10^{-2})$	b	f
R1	6.7286	1.5192	1.0527
R2	6.3229	1.1254	0.7479
R3	2.5024	3.3280	1.2523
R4	6.0426	6.7293	1.1074
R5	2.3944	1.5707	0.0003

According to (2), the power consumption of each HVAC unit is the sum of that of the compressor and the fan. When comparing the disaggregated power-temperature model with the individually measured HVAC power consumption, the offset power from each individual meter should also be considered. Therefore, the offset power is added as shown in (9):

$$P_i = S_i(\omega_i \cdot Temp_{out} + b_i) + S_{fi} \cdot f_i + \mu_i \qquad (9)$$

Similar to μ , the offset power of an individual meter i (μ_i) represents either noise or the power consumption of always-on devices. Table III shows the offset power of each individual power meter, which is derived as the average power readings when S_i^t and S_{fi}^t are both 0.

TABLE III. OFFSET POWER (KW) OF FIVE INDIVIDUAL POWER METERS

μ_1	μ_2	μ_3	μ_4	μ_5
0.1796	0.0717	0.0474	0.2099	0.6128

Fig. 4-8 illustrate the plot of HVAC power consumption and outdoor temperature of each HVAC unit in each zone of the building, respectively. These points represent the individually measured HVAC power consumption when both the compressor and fan are ON ($S_i = 1$). In these figures, the black lines represent the disaggregated HVAC power consumption based on the power-temperature model in (9) with parameters shown in Table II, and the offset power shown in Table III. The red lines are directly fitted from the individually measured data from five power meters.

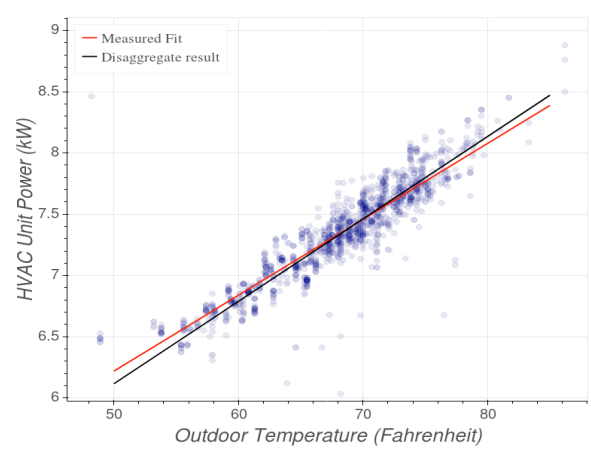

Fig. 4. HVAC power consumption based on the power-temperature models vs the measured consumption of HVAC#1.

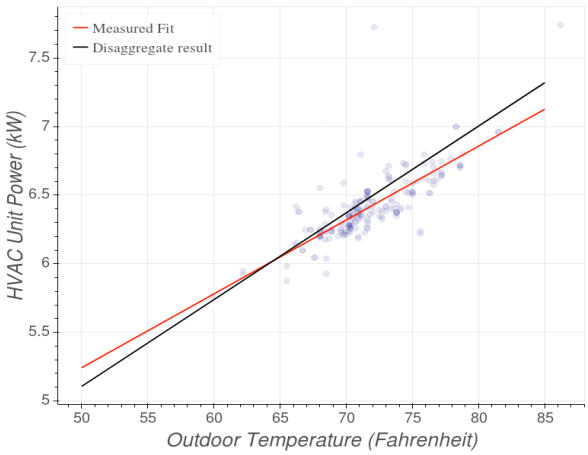

Fig. 5. HVAC power consumption based on the power-temperature models vs the measured consumption of HVAC#2.

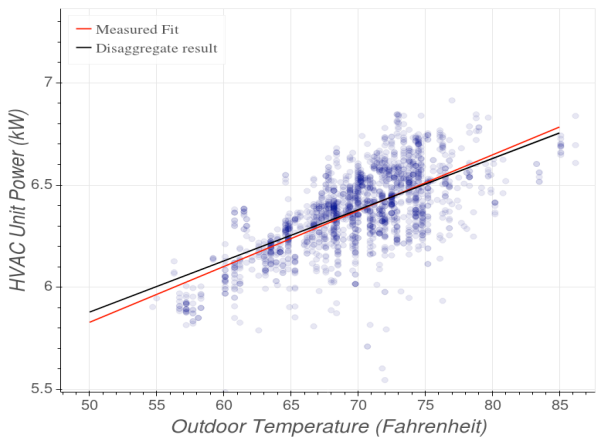

Fig. 6. HVAC power consumption based on the power-temperature models vs the measured consumption of HVAC#3.

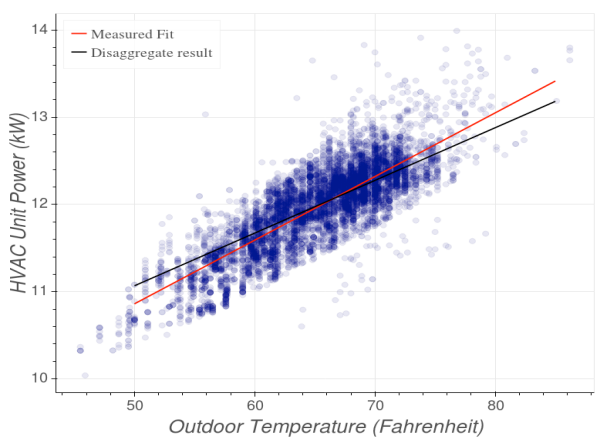

Fig. 7. HVAC power consumption based on the power-temperature models vs the measured consumption of HVAC#4.

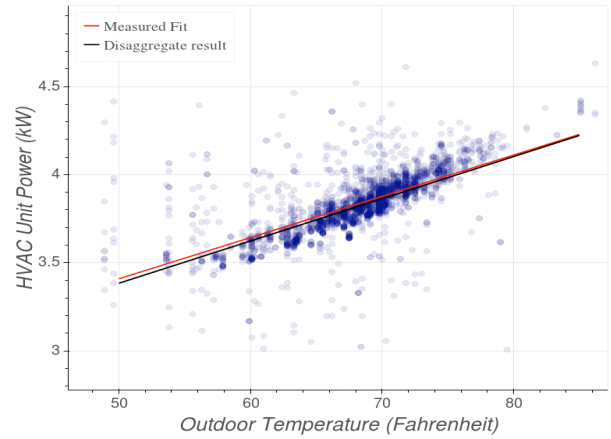

Fig. 8. HVAC power consumption based on the power-temperature models vs the measured consumption of HVAC#5.

The results show that by disaggregating the lumped power consumption data of multiple HVAC units, power consumption characteristics of each HVAC unit can be accurately modeled; and the disaggregated models are close to the individually measured data.

B. Total HVAC power consumption calculated using disaggregated models

Using the testing dataset, the total power consumed by all five HVAC units is calculated given the status of the cooling units and fans of HVAC systems, using (3). The calculated total power consumption of all HVAC units is compared with the measured power consumption from the virtual lumped power meter. This comparison is depicted in Fig. 9, showing 50 randomly selected data points from the testing dataset and the power consumption of each HVAC unit is stacked in the bar chart to represent the total power consumption.

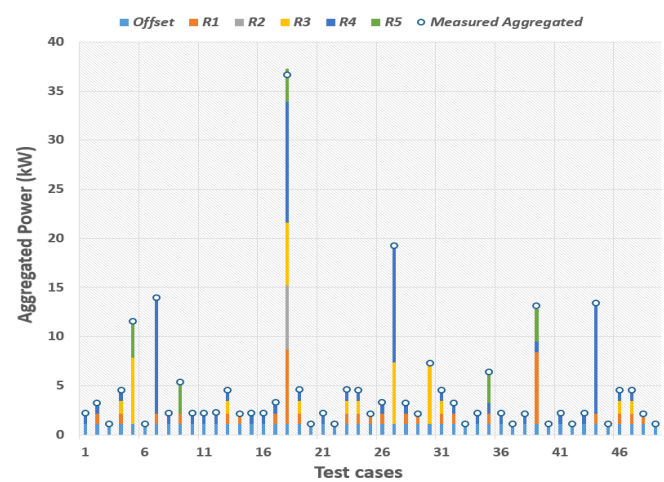

Fig. 9. The calculated total HVAC power consumption vs. the measured total power consumption from the lumped virtual power meter (50 data points)

From Fig. 9, it can be observed that the calculated total HVAC power consumption and the measured data are very close. This means with the disaggregated power-temperature models, the power consumption can be accurately estimated.

In addition, the testing dataset is used for validating the aggregated HVAC power consumption based on individual power-temperature models. The result is shown in Fig. 10, where the x-axis represents the measured power consumption from the lumped power meter, and the y-axis represents the aggregated HVAC power consumption calculated from (3). The data points show a reliable $y = x$ relationship, demonstrating that the power can be precisely estimated.

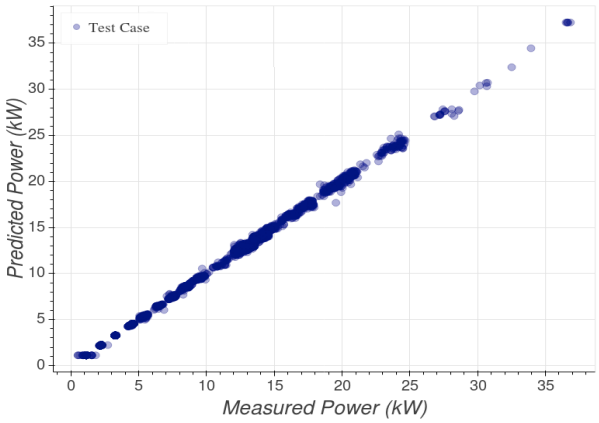

Fig. 10. Aggregated HVAC power consumption based on power-temperature models vs. total HVAC power consumption from the lumped power meter.

Therefore, this algorithm demonstrates a strong capability for precisely estimating multiple HVAC power consumption when the control strategy is given (which units to be ON/OFF). This accurate estimation enables a precise power control for a BEM system to maintain the total HVAC power consumption under a certain demand limit during DR events.

C. Requirement on the Size of the Training Dataset

Data collection process takes time: for a single day, 1440 data points can be collected at 1-minute intervals if no bad data occurs. Then, the question is to what extent is the data size sufficient to disaggregate power consumption of individual HVAC units? To answer this question, based on the above example with five HVAC units, additional studies using smaller training dataset (i.e., 75%, 50% and 25% of the original training dataset size of 31,064 data points) were conducted while keeping the size of the testing dataset the same. Using different sizes of the training dataset, the performance of the proposed power disaggregation algorithm to estimate the total HVAC power consumption was compared. Mean absolute error (MAE), root mean square error (RMSE) and maximum error (MAX) were used as indices, as shown in Table IV.

TABLE IV. ERROR ANALYSIS

Data size as % of the original training dataset	Data points	MAE (kW)	RMSE (kW)	Max (kW)
100%	31,064	0.0589	0.1258	1.8621
75%	23,298	0.0588	0.1259	1.8815
50%	15,532	0.0586	0.1252	1.8430
25%	7,766	0.0587	0.1255	1.8837

From Table IV, two observations can be drawn: First, the maximum errors are small (i.e., less than 1.9kW from the aggregated peak HVAC power consumption of 38kW). This shows the effectiveness of the proposed power disaggregation approach to estimate the total HVAC power consumption. Second, in this example with five HVAC units, it appears that disaggregating individual HVAC power consumption can be carried out quite accurately even with 25% of the original training dataset (i.e., 7,766 data points). This implies that approximately one week of data collection that can provide a variety in training dataset to ensure matrix $\mathbf{X}$ in (8) is not singular is sufficient to derive the HVAC power-temperature models. Note that the second observation is valid for the case of five HVAC units. For a building with higher number of HVAC units, more parameters in (8) need to be identified and thus larger training dataset maybe required. This can be further investigated.

V. CONCLUSION AND FUTURE WORK

To facilitate a more accurate control of HVAC units during a DR event, a power disaggregation approach to precisely estimate power consumption of multiple HVAC units from a single power meter is needed. This paper addresses the knowledge gap in modeling HVAC power consumption by deriving HVAC power-temperature models. This is in contrast to the fixed power consumption models that are utilized by most HVAC control strategies. To develop the HVAC power-temperature models, a power disaggregation algorithm is proposed by analyzing data collected from a single power meter, which helps reduce hardware investments for building owners. Research findings indicate that the proposed power disaggregation algorithm can separate each HVAC unit's power consumption pattern accurately. Based on these power-temperature models, the power consumed by all HVAC units under different control status can be precisely estimated. Future work may include expanding this algorithm to consider multi-stage HVAC units, whose power consumption is different at different cooling stages. In addition, the size of training dataset needed for buildings with different number of HVAC units can be investigated.

REFERENCES

[1] D. Zhang, N. Shah, and L. G. Papageorgiou, "Efficient energy consumption and operation management in a smart building with microgrid," *Energy Convers. Manag.*, vol. 74, pp. 209–222, 2013.

[2] L. Wang, Z. Wang, and R. Yang, "Intelligent multiagent control system for energy and comfort management in smart and sustainable buildings," *IEEE Trans. Smart Grid*, vol. 3, no. 2, pp. 605–617, 2012.

[3] "Introducing BEMOSS™ An open source platform for building energy management." [Online]. Available: www.bemoss.org. [Accessed: 18-Apr-2018].

[4] "Welcome to openHAB - a vendor and technology agnostic open source automation software for your home." .

[5] "Home Assistant Open Source Home Automation Platform." [Online]. Available: https://www.home-assistant.io/. [Accessed: 18-Apr-2018].

[6] F. Oldewurtel, a. Ulbig, a. Parisio, G. Andersson, and M. Morari, "Reducing peak electricity demand in building climate control using real-time pricing and model predictive control," *Decis. Control (CDC), 2010 49th IEEE Conf.*, pp. 1927–1932, 2010.

[7] E. Biyik, S. Genc, and J. D. Brooks, "Model predictive building thermostatic controls of small-to-medium commercial buildings for optimal peak load reduction incorporating dynamic human comfort models: Algorithm and implementation," *2014 IEEE Conf. Control Appl. CCA 2014*, pp. 2009–2015, 2014.

[8] F. Sehar, M. Pipattanasomporn, and S. Rahman, "A peak-load reduction computing tool sensitive to commercial building environmental

preferences," *Appl. Energy*, vol. 161, pp. 279–289, 2016.

[9] S. Katipamula and N. Lu, "Evaluation of Residential HVAC Control Strategies for Demand Response Programs," *ASHRAE Trans.*, vol. 112, no. May 2014, 2006.

[10] V. L. Erickson and A. E. Cerpa, "Occupancy Based Demand Response HVAC Control Strategy," *BuildSys*, pp. 7–12, 2010.

[11] D. Arnold, M. Sankur, and D. M. Auslander, "An architecture for enabling distributed plug load control for commercial building demand response," *2013 IEEE PES Innov. Smart Grid Technol. Conf. ISGT 2013*, 2013.

[12] "Commercial Building Energy Consumption Survey 2012, Table E3. Electricity consumption (Btu) by end use," *U.S. Energy Information Administration*, 2016. [Online]. Available: https://www.eia.gov/consumption/commercial/data/2012/c&e/cfm/e3.php.

[13] D. Kim, J. E. Braun, J. Cai, and J. Hu, "Development and experimental demonstration of a plug-and-play multiple RTU coordination control algorithm for small/medium commercial buildings," *Energy Build.*, vol. 2015–July, pp. 1659–1664, 2015.

[14] X. Zhang, M. Pipattanasomporn, and S. Rahman, "A self-learning algorithm for coordinated control of rooftop units in small- and medium-sized commercial buildings," *Appl. Energy*, vol. 205, no. June, pp. 1034–1049, 2017.

[15] W. Khamphanchai *et al.*, "Conceptual architecture of building energy management open source software (BEMOSS)," *IEEE PES Innov. Smart Grid Technol. Eur. Istanbul*, pp. 1–6, 2014.

[16] X. Zhang, R. Adhikari, M. Pipattanasomporn, M. Kuzlu, and S. Rahman, "Deploying IoT devices to make buildings smart: Performance evaluation and deployment experience," in *2016 IEEE 3rd World Forum on Internet of Things (WF-IoT)*, 2016, pp. 530–535.